Crabtree

RCBO
Type:ELE

Assembly instructions

Type A

IEC 61009-1

GB **Installation advice**
Installation, connection, and commissioning shall only be carried out by qualified competent person.

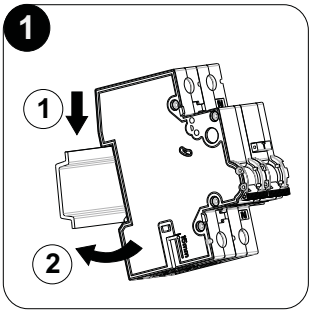

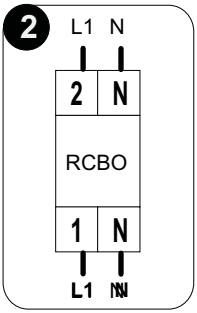

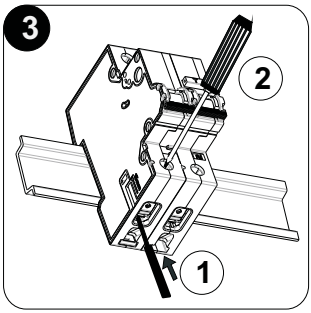

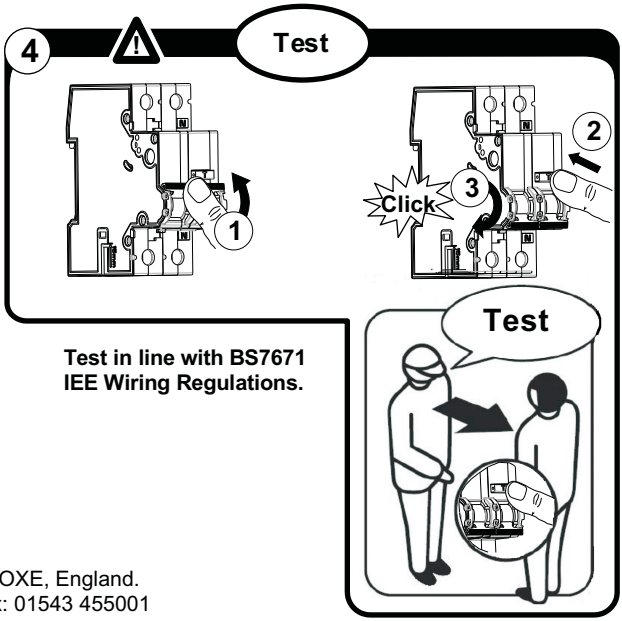

Test in line with BS7671 IEE Wiring Regulations.

Electrium Sales Limited
Walkmill Lane, Cannock, WS11 OXE, England.
Tel: 01543 455000 Fax: 01543 455001

3339214103_02