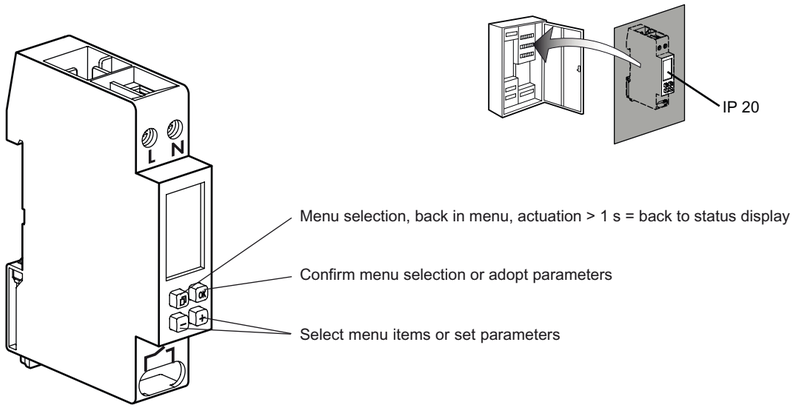

M	230 V 50/60 Hz
	16 A / 250 V~ µ cos φ = 1
P	0,9 W
Programs	28
	± 1 s / day
	1 ... 4 mm² / 0,5 ... 2,5 mm² / 8 mm
3 V	3 years
	- 20 °C … +55 °C
	- 20 °C … +60 °C

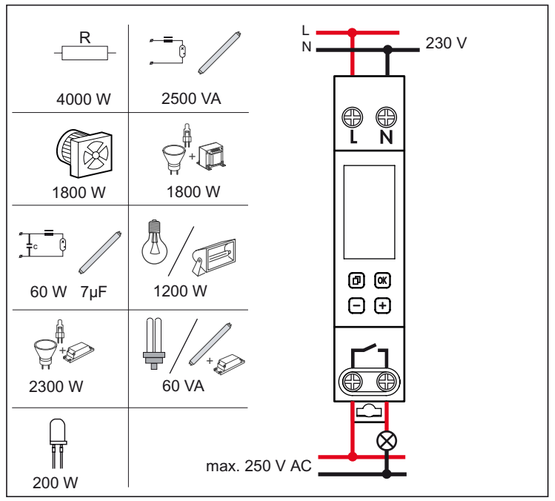

⚠ Safety notes

This product may be installed only by a qualified electrician. Incorrect installation and/or incorrect use may result in a fire hazard or electric shocks. Before installation, read the operating instructions and observe the productspecific requirements for the installation location. Use only original spare parts for repair and maintenance. All products may be opened and repaired only by specially trained personnel. Unauthorised opening and repair by other persons will invalidate all claims for liability, replacement or warranty services. The device contains a Li cell type battery ($LiMnO_2$) CR2032. When the product reaches the end of its life, this cell must be correctly removed and disposed of in accordance with national legislation and the requirements of environmental protection.

① SET TIME/DATE

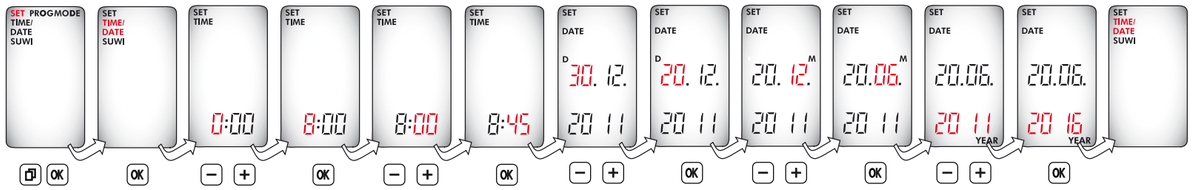

Operating principle:

Typ 1.B. S. T.
IEC/EN 60730-1,
IEC/EN 60730-2-7
Montage: in distribution panel,
Degree of contamination: 2
Switch output, potential-free
Rated impulse voltage: 4 kV

Reset

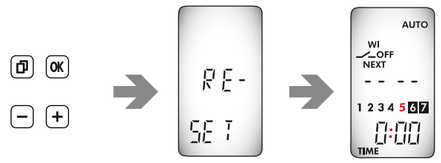

Note!
A reset clears the entire memory, which means that all previously set data will be lost. Press and hold all four keys together for about 2 seconds, then release them. The time, date, summertime/ wintertime and switching times will have to be re-entered.

② SET SUmmer → WInter-time

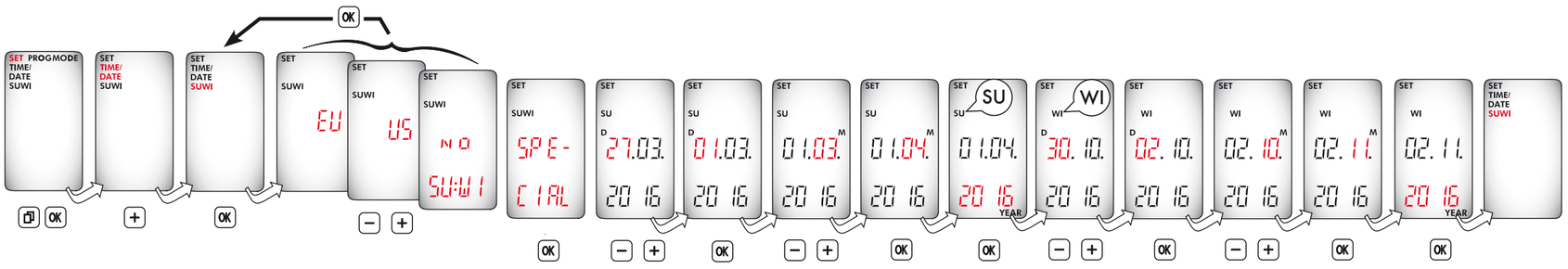

③ Prog NEW

Programming
One program = switch-on time + switch-off time + switch-on and switch-off days
Programs with predefined switch-on / switch-off days
• DAY 1-7 (MO-SU) • DAY 1-5 (MO-FR) • DAY 6-7 (SA and SU)
Programs for each channel are interlinked with OR logic.

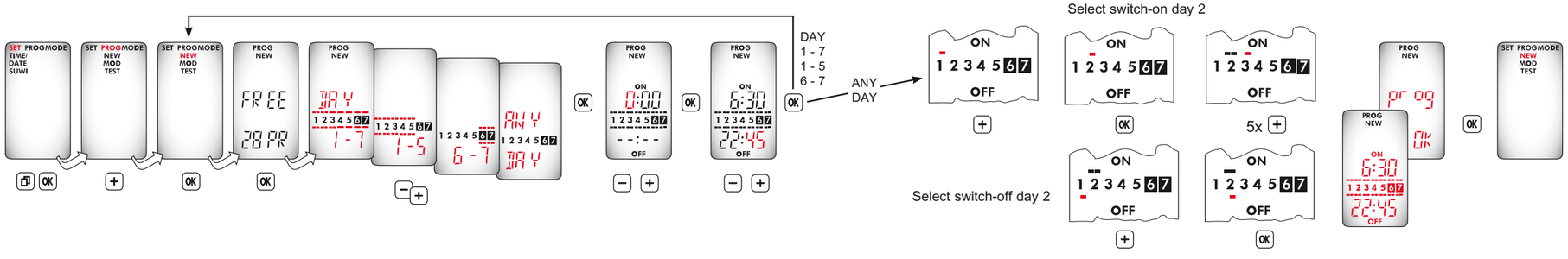

N 290970/00

④ Prog MODIFY

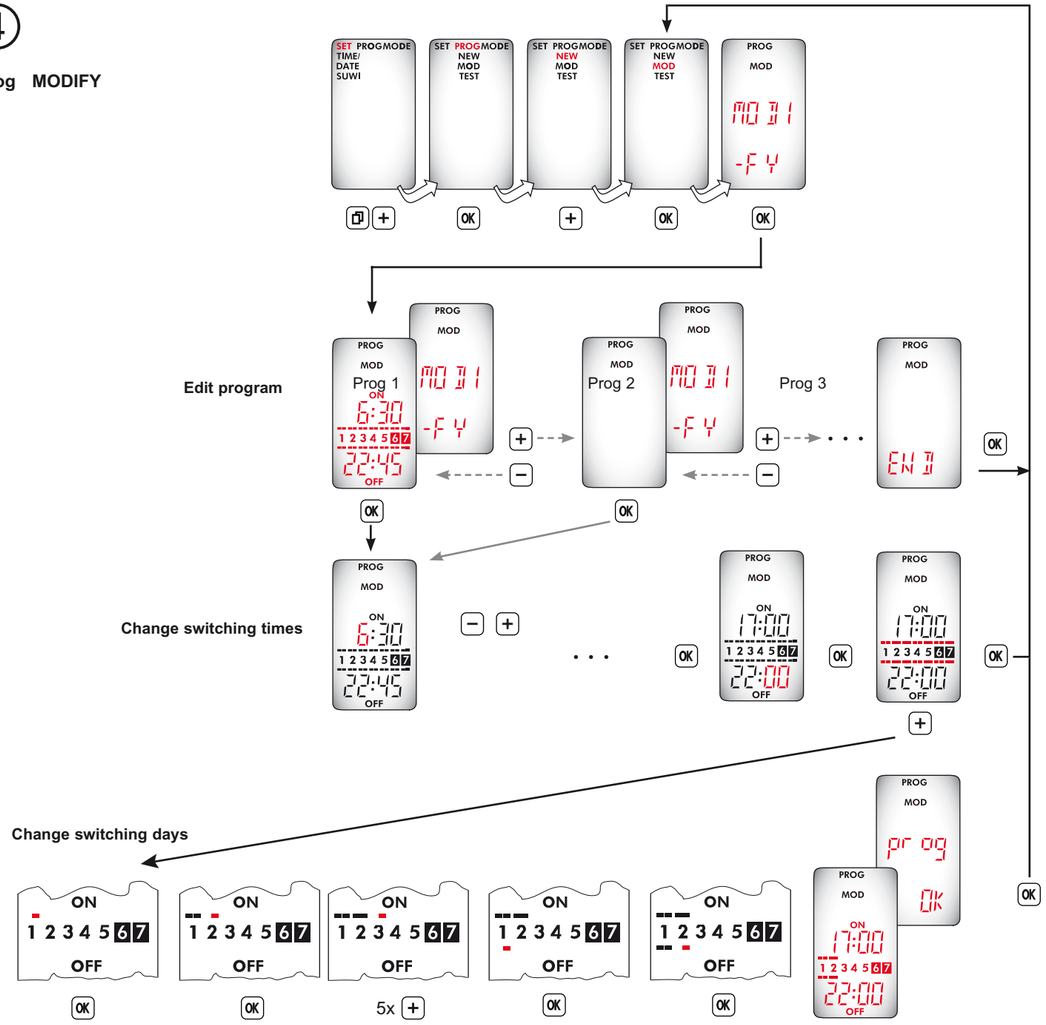

④A Prog MODIFY

DEL ONE -> Delete a single program, **DEL ALL** -> Delete all programs

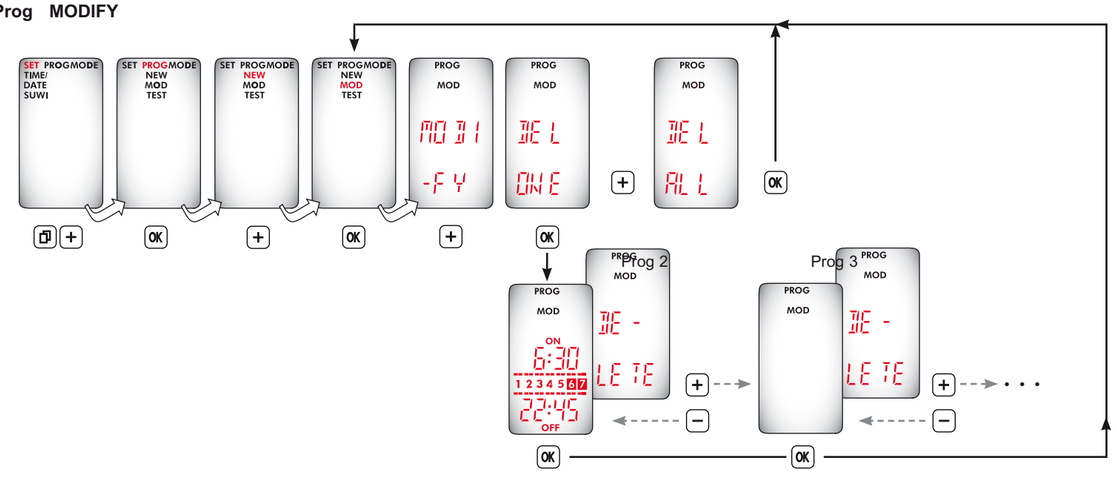

⑤ Prog TEST

prog -> Programs in the order entered

SERIAL -> Switching commands in chronological order

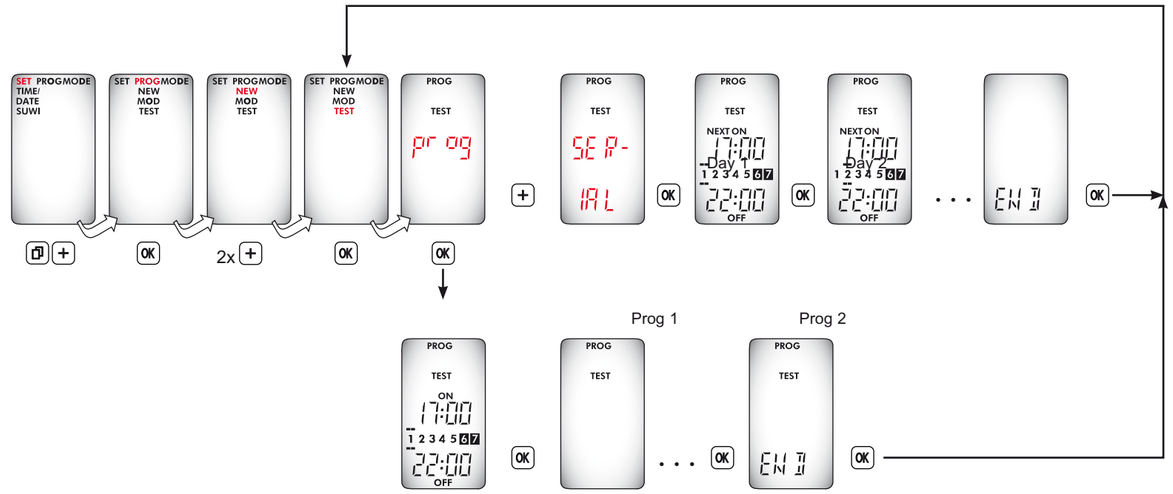

⑥ MODE PERManent

Continuous switching On/Off

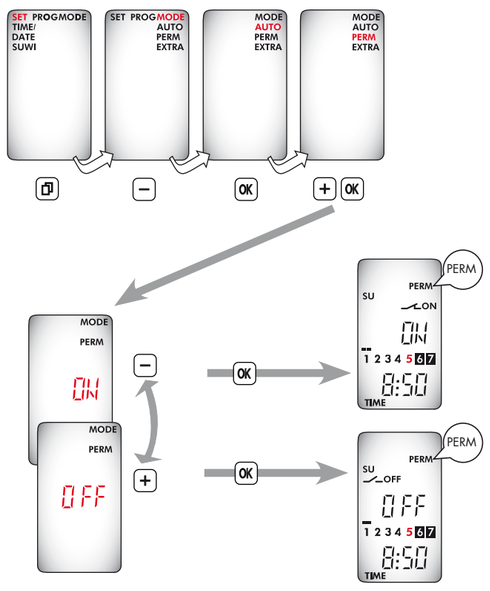

⑦ Mode EXTRA

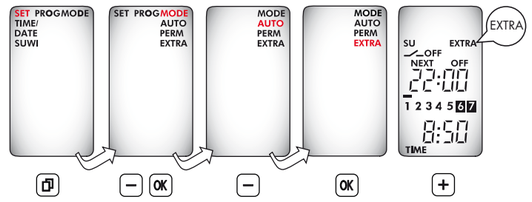

State of contact set by program will be reversed. The next program automatically returns the switch to ON or OFF as programmed.
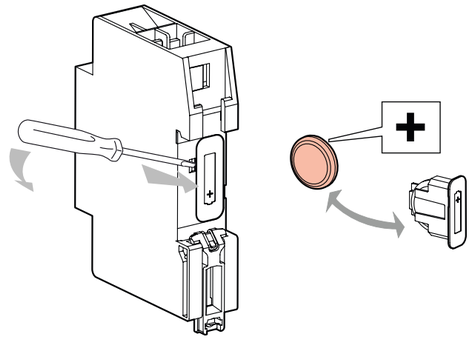
Switch off the device before dismantling the module.
Do not switch on again until the module has been installed.
Always use a Li cell type battery ($LiMnO_2$) CR2032, 3 V. High temperature type min +70 °C.
The device contains a Li cell type battery ($LiMnO_2$) CR2032. When the product reaches the end of its life, this cell must be correctly removed and disposed of in accordance with national legislation and the requirements of environmental protection.