Installation Instructions for Reverse Fixings

Installation and operation must be in accordance with published data, instructions and diagrams and with any relevant national and local regulations.

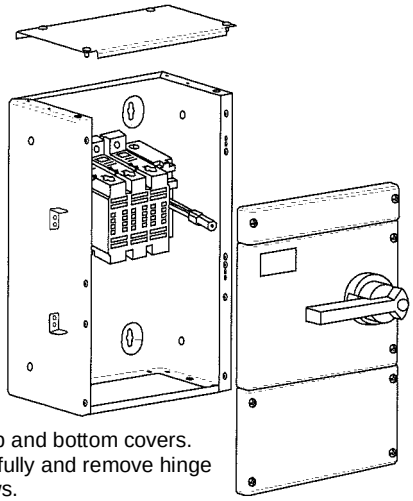

A) Remove top and bottom covers.
B) Open door fully and remove hinge fixing screws.
C) Remove door.

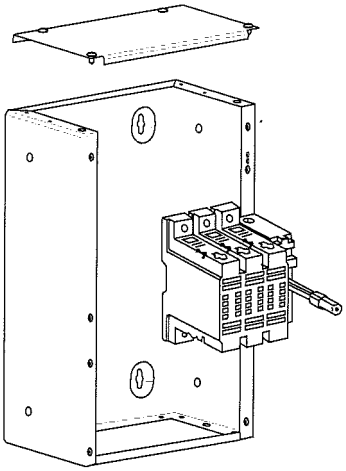

D) Remove switch fixing screws and remove switch

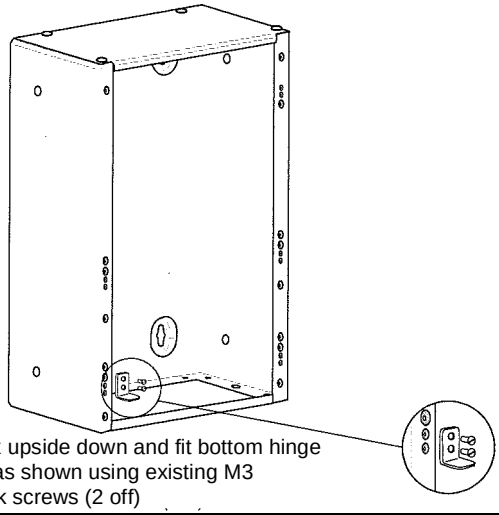

E) Turn box upside down and fit bottom hinge in position as shown using existing M3 countersunk screws (2 off)

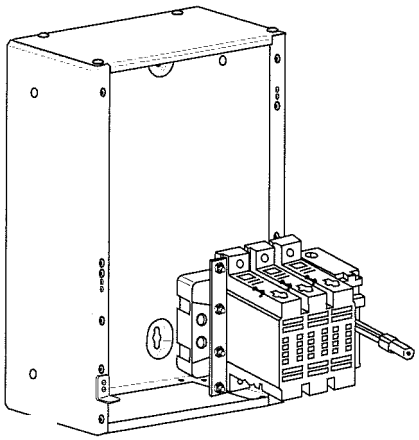

F) Fit switch
G) Fit Neutral

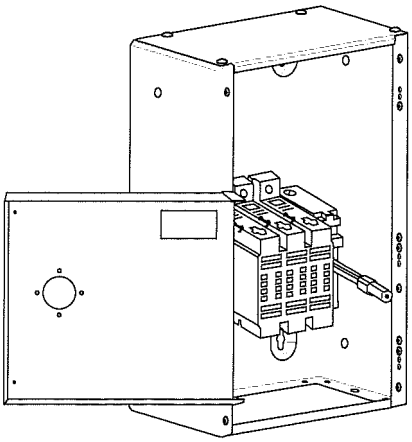

H) Locate door on bottom hinge pin and open door fully.
I) Fit top hinge with existing M3 countersunk screws (2 off)

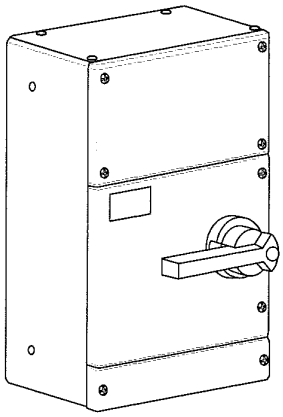

J) Fit remaining covers.
K) Refer to section 3 INSTALLATION PROCEDURE for remaining checks to switch.

Electrium Sales Limited, Walkmill Lane, Cannock, WS11 0XE, England
Siemens Ltd, Old Finglas Road, Dublin, Ireland
Tel: 01543 455000 Fax: 01543 455001

UK CA

NH
SF

Fitting Instructions for fuse combination units

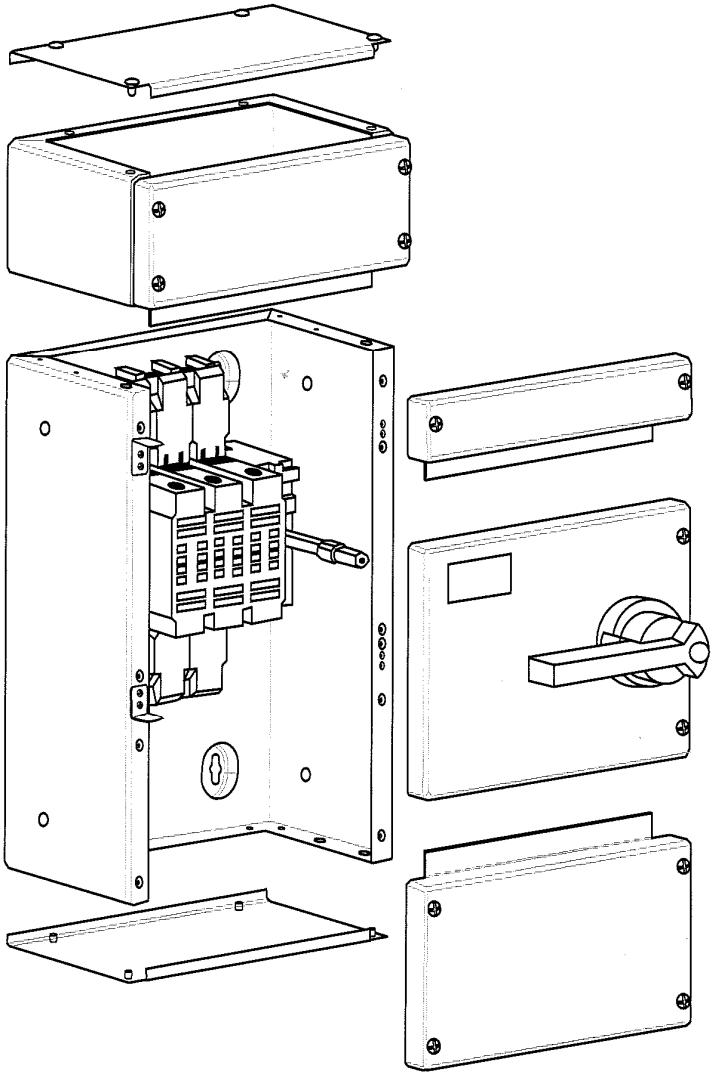

1) **INSPECTION ON RECEIPT,** The following are supplied with each switch

Size				
20A -32A	HOUSING C/W SWITCH		EARTH FIXING KIT	FUSE KIT
63A	HOUSING C/W SWITCH		EARTH FIXING KIT	FUSE KIT
100A	HOUSING C/W SWITCH	TERMINAL FIXING KIT	EARTH FIXING KIT	FUSE KIT
125A – 200A	HOUSING C/W SWITCH	TERMINAL FIXING KIT	EARTH FIXING KIT	FUSE KIT (125A ONLY)
315A -- 400A	HOUSING C/W SWITCH	TERMINAL FIXING KIT	EARTH FIXING KIT	
630A – 800A	HOUSING C/W SWITCH	TERMINAL FIXING KIT	EARTH FIXING KIT	

Storage prior to installation must be in clean dry condition.

2) **Safety.**

DANGER HAZARDOUS VOLTAGE

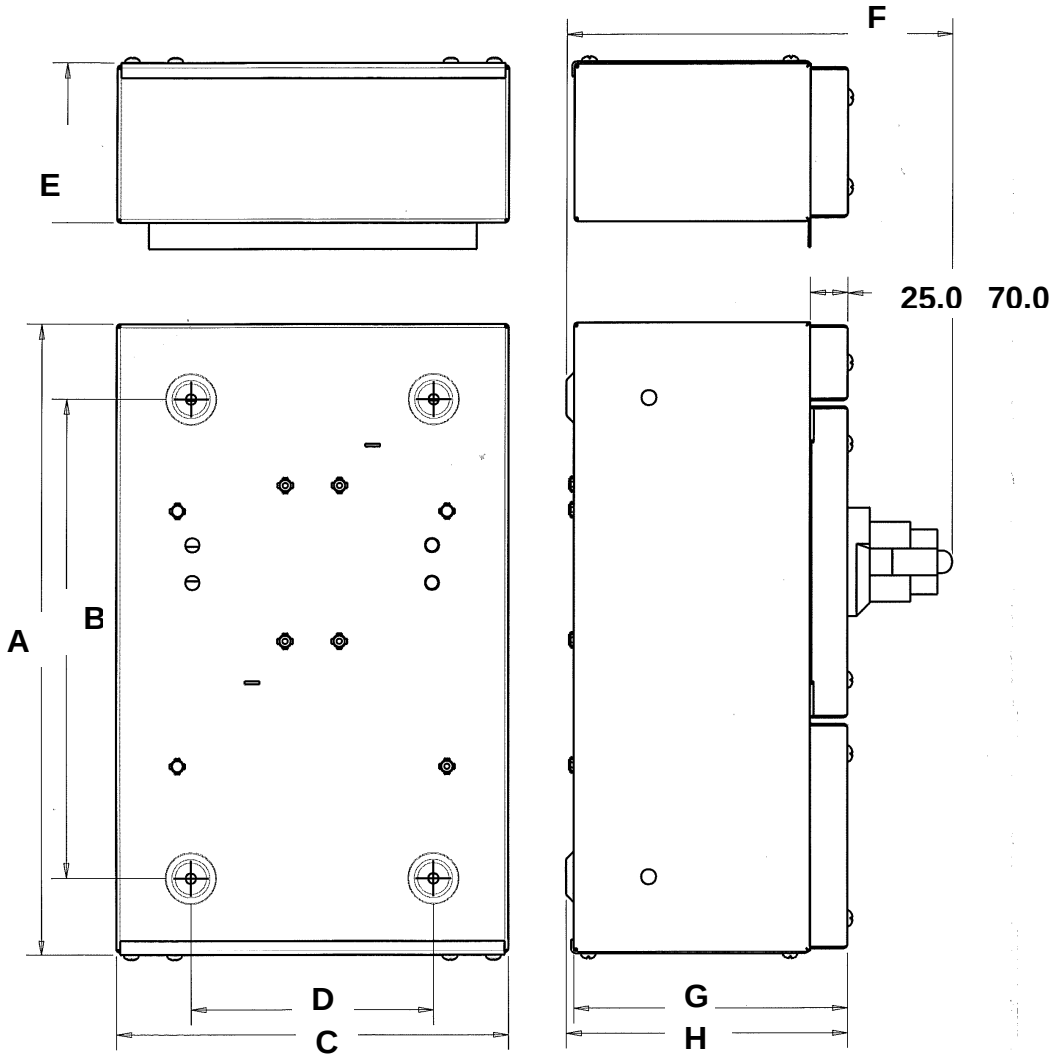

Size	A	B	C	D	E	F	G	H
20A -32A	220	150	210	140	105	200	130	135
63A	420	320	262	162	105	258.5	183	188
100A – 125A	420	320	262	162	105	258.5	183	188
160A – 200A	525	425	315	215	105	305	235	240
250A – 400A	735	645	420	320	210	305	235	240
630A – 800A	850	760	630	430	210	355	285	290

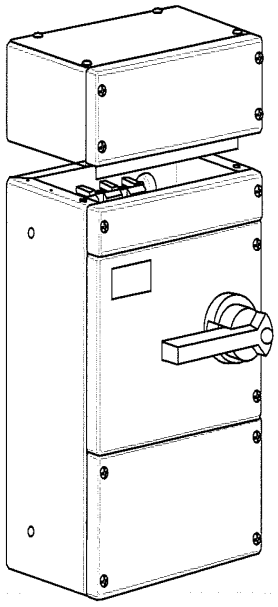

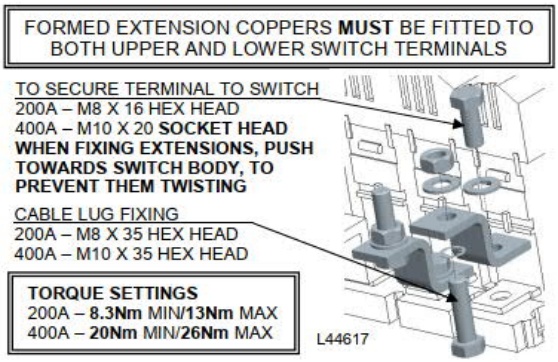

3) INSTALLATION PROCEDURE

INSTALLATION AND OPERATION MUST BE IN ACCORDANCE WITH PUBLISHED DATA, INSTRUCTIONS AND DIAGRAMS AND WITH ANY RELEVANT NATIONAL AND LOCAL REGULATIONS.

With the housed switch in the Off position mount as shown on page 2.
(for ease of installation the switch can be temporarily removed from the housing)
Verify the mechanical operation of the switch.
Check the operation of the door interlock (i.e. the door cannot be opened with the switch in the ON position)
Fit the required fuse links or isolator links (using the fasteners provided)
Check the electrical continuity of the switch.
The incoming connection may be made to the terminals at either end of the switch.
Terminal shields provided must be fitted after connection to all phases and both sides of the switch.

TERMINAL DATA

Size	Phase Width	Terminal Width	Terminal Hole Size
20A -32A	21.5mm	6.5mm	Box Terminals Max 16mm²
63A	32.0mm	7.0mm	Box terminals Max 25mm²
100A – 125A	36.0mm	22.0mm	M8
160A – 200A	36.0mm	22.0mm	M8
250A	60.0mm	32.0mm	M10
315A – 400A	66.0mm	50.0mm	M10
630A	80.0mm	50.0mm	M12
800A	80.0mm	50.0mm	4 x M8 or 1 x M14

4) FUSE AND TERMINAL TORQUE VALUES

Thread Size	Torque Value	Thread Size	Torque Value
M4	1.35Nm	M8	17Nm
M5	5.5Nm	M10	28Nm
M6	9.5Nm	M12	45Nm

5) Maintenance

No maintenance of the switch is required except for the periodic checking of the tightness of the terminals and fuse links.
Maintenance must be carried out by competent personnel with the supply isolated.

Fuse Selection Data				
Current Rating	**BS88 Reference**	**Lawson**	**GEC**	**Busman**
20A -32A	A1	NIT	NIT	NITD
63A	A3, A2	TIS	TIS	BAO
100A	A4	TCP	TCP	CEO
125A	A4	TFP, TCP	TFP, TCP	DEO
160A	A4	TFP, TCP	TFP, TCP	DEO
200A	A4	TFP, TCP	TFP, TCP	DEO
315A	B3	TKF	TKF	ED
400A	B4,B3,B2,B1	TMF	TMF	ED
630A	C2,C1	TTM	TTM	FF
800A	C3,C2,C1	TLM	TLM	GF